PORCHER™

CLAREMONT™
ELONGATED 1-PIECE TOILET
VITREOUS CHINA

CLAREMONT ELONGATED 1-PIECE TOILET, MODEL 9004X

- Design-matched to Claremont Suite products
- Vitreous china construction
- Low-profile, traditional 1-piece design
- Supplied with chrome or polished brass trip lever
- Art availability
- Full color availability
- Low-consumption, quiet refill (1.6 gpf/6.0 Lpf)
- Elongated siphon action bowl with smooth-sided, concealed trapway
- Rim height at 14-1/2” (368mm)
- Internal trapway area fully glazed
- 100% factory flush tested

90040 Toilet complete with chrome trip lever

90042 Toilet complete with polished brass trip lever

Nominal Overall Dimensions:
28-1/2” x 17-3/4” x 25-1/2” (724 x 451 x 648mm)

Fixture only, supply by others

Hydraulic performance, water surface area, trap seal depth, ballpass diameter, and all fixture dimensions meet or exceed ANSI Standard A112.19.2M requirements.

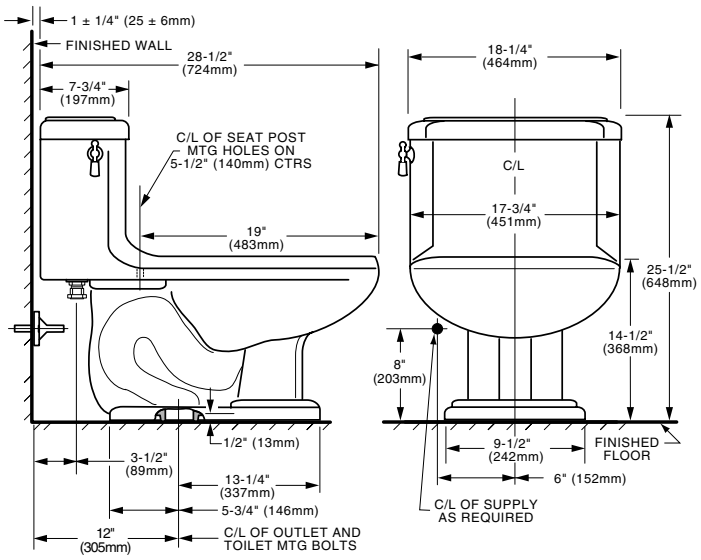

To Be Specified

Color:

Art design:

Supply with stop:

NOTES:
THIS TOILET IS DESIGNED TO ROUGH-IN AT A MINIMUM DIMENSION OF 12” (305MM) FROM FINISHED WALL TO C/L OF OUTLET.
SUPPLY AND SEAT NOT INCLUDED WITH FIXTURE AND MUST BE ORDERED SEPARATELY. DIMENSIONS SHOWN FOR LOCATION OF SUPPLY ARE SUGGESTED.
IMPORTANT: Dimensions of fixtures are nominal and may vary within the range of tolerances established by ANSI Standard A112.19.2M.
These measurements are subject to change or cancellation. No responsibility is assumed for use of superseded or voided pages.

SPS 9004X

© 2002 American Standard Inc.